IDh
Innovación y
Desarrollo de herrajes

# BISAGRA PALA LARGA CONTRAVENTANA 2 o 3 PALAS

## Aplicaciones-Applications

**Bisagra para mallorquinas y contraventanas de canal centrado.**
Hinge for louvre windows or shutters, designed with centered groove.

## Características-Features

**Bisagra para la unión marco-hoja de perfiles con canal centrado.**
Fitting plates for easy installation autodrill screw for end fixation.

BI004613T

BI004613P

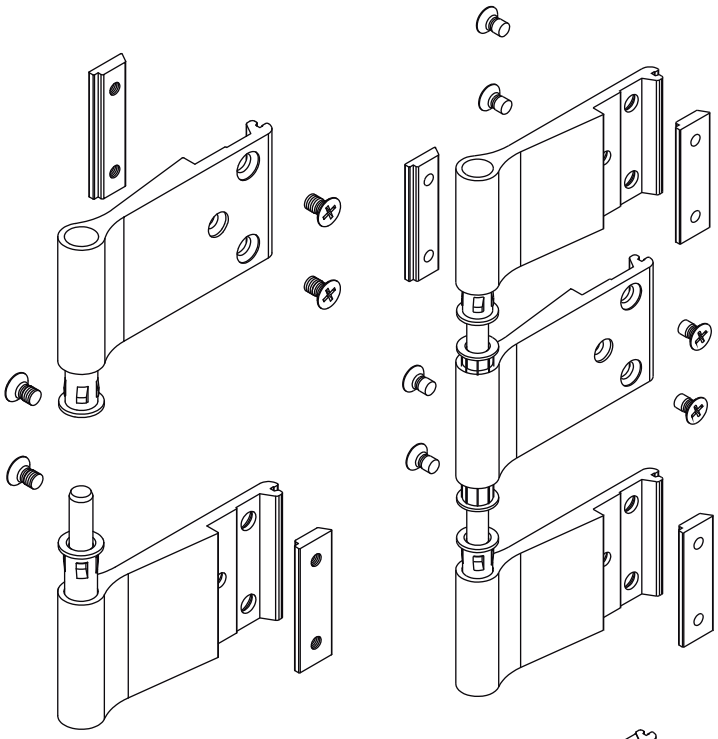

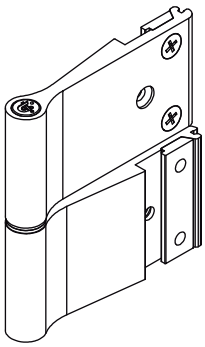

BI004613T

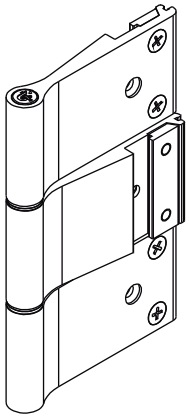

BI004613P

| **Código** - Reference | |
|---|---|
| BI004613T | Bisagra BI0046 2 Palas |
| BI004613P | Bisagra BI0046 3 Palas |

| **Componentes** - Components | |
|---|---|
| **Bisagra** | **Aluminio** |
| **Casquillos** | **Poliamida** |
| **Eje** | **INOX** |
| **Placas** | **Aluminio** |
| **Tornillos** | **INOX** |

| **Embalaje** - Packaging | | |
|---|---|---|
| Pack 50 unid. | 240x190x105 cms. | 8 kgs |

Acabados/colores-Finishing-Colours

| 0 | 7 | 8 | 9 | X |
|---|---|---|---|---|
| Plata/Silver | Blanco/White | Negro/Black | RAL | Sin tratamiento |